CZECH UP YOUR BEER
COOLING AND DISPENSING SYSTEMS

ENGLISH

INSTRUCTION MANUAL FOR LINDR CONTACT DRY COOLER

Number 005-2020 REV01 Valid 2020-01-29

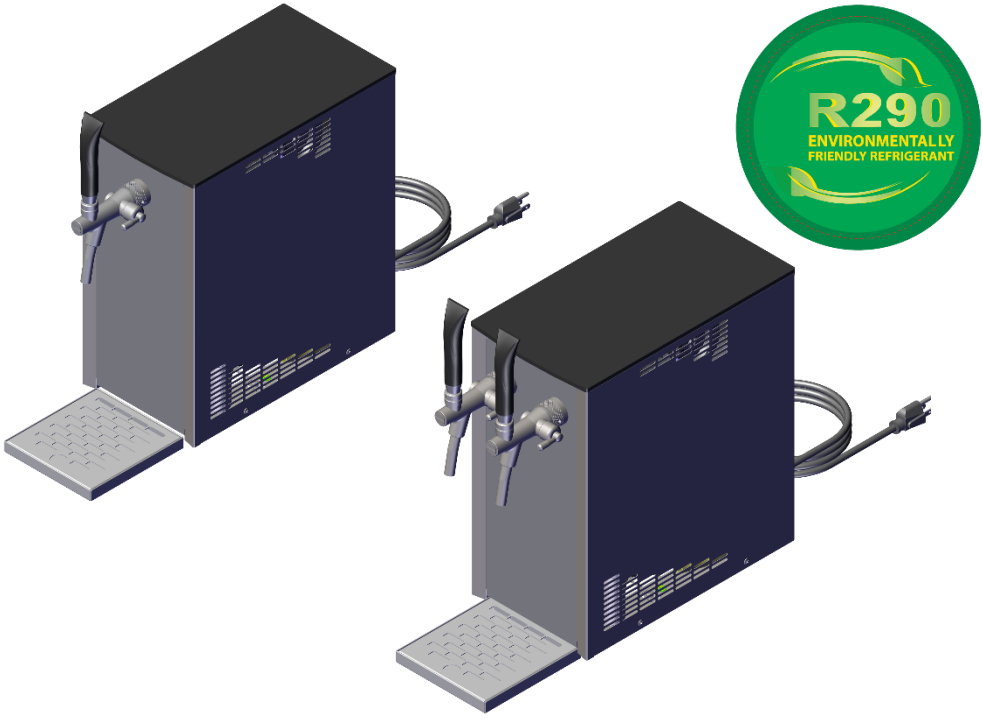

Pygmy 25-K Exclucive-us Green Line 1xkohout
Pygmy 25-K Exclusive-us Green Line 2x kohout

LINDR.CZ s.r.o.
CHLADICÍ A VÝČEPNÍ TECHNIKA
SADOVÁ 132, CZ 503 15 NECHANICE ČESKÁ REPUBLIKA
495 447 239 495 425 085 info@lindr.cz / www.lindr.cz

This manual contains instructions for installing, using and operating the machine. This manual is an integral part of the machine. It must be stored at the equipment for the life of the equipment and provided to the user whenever it is installed, moved, used, or maintained. Read this manual carefully before installing and using the equipment, it contains important information to ensure that all operations are performed in a proper and safe manner.

This manual is a translation of the original Czech manual.

Contents:

1.	Introduction	5
2.	Description of the cooler	5
3.	Product label	5
4.	General instructions, measures and safety instructions	6
5.	Installation and placement	7
6.	Electrical connection	8
7.	Testing	8
8.	Warranty	8
9.	Description of the cooler	9
10.	Package contents	11
11.	Tap installation	12
12.	Keg coupler assembly	13
13.	Beverage supply connection and pressurisation	16
14.	Inlet and outlet marking	18
15.	Keg tapping and untapping	19
16.	Putting into operation	25
17.	Thermostat placement	26
18.	Temperature and adjustment	26
19.	Built-in air compressor	27
20.	How to work with rapid couplings	27
21.	Environmental protection	28
22.	Maintenance	28
23.	Inspection before every use	28
24.	Periodic checks	29
25.	Condenser cleaning	29
26.	Sanitation by water	30
27.	Table of defects	32
28.	Spare parts	33
29.	Technical data	33
30.	Wiring diagram	34
31.	Cooling diagram	35

Symbols and Markings Used in the Manual

WARNING:
Not following instructions may cause injury or damage the device.

WARNING:
Risk of injury by electrical current.

NOTE:
This symbol indicates information and recommendations for users.

WARNING: The cooling system contains flammable coolant R290 (propane)!

---

1. Introduction:

Thank you for purchasing this LINDR product.

2. Description of the Cooler

The dispensing system

with built-in compressor is designed for professional cooling of beverages and dispensing and serving well cooled beer and beverages from a keg.

It is the elite among professional table-top coolers.

The Lindr modern compressor cooling unit uses input energy and transforms it directly into cooling, ensuring proper beer cooling at minimum energy drain.

The thermal block with high energy capacity is ready to dispense well cooled beer within 5 - 10 minutes after turning on the device. If the thermostat is set to max., the thermal block can accumulate a large amount of energy it can use to dispense well cooled beers one after another. Time needed to accumulate energy is ca. 10 min. Lindr cooling technology has 45 % higher output than is its input energy. The cooler is fitted with an aftercooled tap that ensures proper cooling even for small amounts of beer. The full body and the coil of the cooler are made of stainless steel. The materials used meet the strictest hygienic standards and guarantee long service life of the cooler.

3. Product Label

4. General Instructions, Measures and Safety Instructions

When using the device, follow basic safety instructions stated by the manufacturer. The cooling device is designed for flow cooling of beverages dispensed from kegs. Any other use is considered impermissible and therefore dangerous. The supplier is not liable for damage caused by incorrect use.

DO NOT USE THE DEVICE FOR PURPOSES OTHER THAN THOSE STATED BY THE MANUFACTURER!

General safety principles. Observe the following safety instructions.

The supplier is not liable for damage caused by activities carried out on this device without observing the following instructions!

⚠ ***WARNING:*** Children aged 15 or more and persons with reduced physical, sensory or mental capabilities or insufficient experience and knowledge may only use the device when supervised or instructed in safe use of the appliance and familiarised with potential dangers.

⚠ ***WARNING:*** Children must not be allowed to play with the appliance. Store all packaging material out of reach of children (comes with a plastic bag – suffocation hazard).

⚠ ***WARNING:*** Cleaning and maintenance of the appliance on the part of the user must not be done by unsupervised children.

⚠ ***WARNING:*** Before connecting to main electrical supply, check that the voltage and frequency in the mains corresponds to the data stated on the device.

⚠ ***WARNING:*** Always make sure the power socket you plug the appliance into has sufficient circuit protection. See specifications on the product label.

⚠ ***WARNING:*** Before any interference with the device, such as cleaning or maintenance, ALWAYS disconnect the device from power supply: set the thermostat thermostat to "O" position and unplug the appliance from the socket.

⚠ ***WARNING:*** Never place tools or other object into the fan.

⚠ ***WARNING:*** Never touch electrical components with wet or damp hands.

⚠ ***WARNING:*** To ensure the cooling unit works properly and at full capacity, make sure air supply to the unit is not obstructed.

⚠ ***WARNING:*** Water temperature during sanitation must not be higher than 25 °C!

⚠ ***WARNING:*** Always make sure the power socket you plug the device into meets the specifications listed on the product label (voltage, frequency, input power).

⚠ ***WARNING:*** When unplugging the device from the socket, grab the plug and pull it out. Do not under any circumstances pull at the cable; risk of damage.

⚠ ***WARNING:*** To turn the device off completely, unplug the appliance from the power socket.

⚠ ***WARNING:*** In the event the electrical wiring of the product becomes damaged, summon a trained service technician. Do not under any circumstances repair the device yourself.

⚠ ***WARNING: The cooling system contains flammable coolant R290 (propane)!***

⚠ ***WARNING:*** Emergency maintenance and repair of the cooling system must be done by trained, authorised technicians familiar with cooling and electrical systems. The technicians should have special training and qualification for handling flammable substances in order to perform service on coolers containing **R290**. Follow basic regulations and safety measures regarding service and repair!

⚠ ***WARNING:*** Do not use open flame or potential sources of sparks in the vicinity of a cooler using R290 coolant!

⚠ ***WARNING:*** After unpacking, place the cooler so that heat created by the cooling unit can be vented sufficiently.

⚠ ***WARNING:*** Do not place objects that could prevent air circulation on top of the cooler.

5. Installation and Placement

Place the cooler on a horizontally level, stable surface (maximum permitted inclination of 2°). The device requires sufficient free space around it to allow air circulation.

- Ensure sufficient space for air circulation and heat dissipation.
- Ensure sufficient access to fresh air.
- The device must not be placed in an enclosed space.
- The device must not be placed in proximity to heat sources or exposed to direct sunlight.

Minimum distance of vents from an obstacle that would prevent air circulation is 20 cm. In places where there are no vents, minimum distance is 7 cm. The device is best used in a cool, well ventilated room. The device is designed for use at ambient temperature of 16°C – 32°C.**The device MUST NOT be used or stored at ambient temperature lower than 0 °C.** The device is designed for use in a normal environment, always indoors, protected from rain or sunlight. Climate class N.

WARNING: The cooler must be placed indoors (in a roofed area) on a dry, level, stable surface.

WARNING: Protect the cooler and electrical connection from rain and spraying water!

WARNING: Do not under any circumstances lay the cooler on its side, not even during transport.

WARNING: The cooler must not be placed in the vicinity of heat sources or exposed to direct sunlight.

NOTE: In order for the device to work correctly and at maximum output, it is important to not cover up any of the device's vents and ensure sufficient air circulation.

6. Electrical Connection

Connect the device to a power socket in accordance with specifications on the product label of the device. Electrical wiring is subject to local regulations. If the power leads (cables) are damaged, they must be replaced by the manufacturer, their service technician or a similarly qualified person to prevent risk of hazardous situations.

***WARNING:* Do not use or turn on the device if the power lead (cable) is damaged!**

7. Testing

The product is delivered ready for immediate use.

8. Warranty

The device comes with a warranty in accordance with general legal regulations of the Czech Republic or in accordance with the trade agreement. During the validity period of the warranty, we will remove any defects on the product free of charge, provided these defects were not caused by excess wear, improper handling, incorrect storage or by using the product in a way that is counter to the instruction manual or the product's design as defined by the manufacturer. Materials replaced during the validity period of the warranty are our property. The legitimacy of the warranty claim is always decided by an authorised service centre. Warranty provided by a retailer outside of the territory of the Czech Republic is governed by the agreement between the retailer and the buyer in their mutual relationship; this agreement is not directly linked to the manufacturer. The agreement does not give the buyer the right to submit warranty claims to the manufacturer. Transport expenses or other costs are not covered by the warranty.

Attention:

Electrical devices and appliances must be checked/inspected at a time stipulated by valid legislation of the country the device is operated in. Inspection of wiring may only be done by a person with valid authorisation for this activity. Service work, provision of spare parts and inspection is done by the manufacturer or an authorised service centre.

9. Description of the Cooler

Pygmy 25-K-Exclusive US Green Line 1x tap

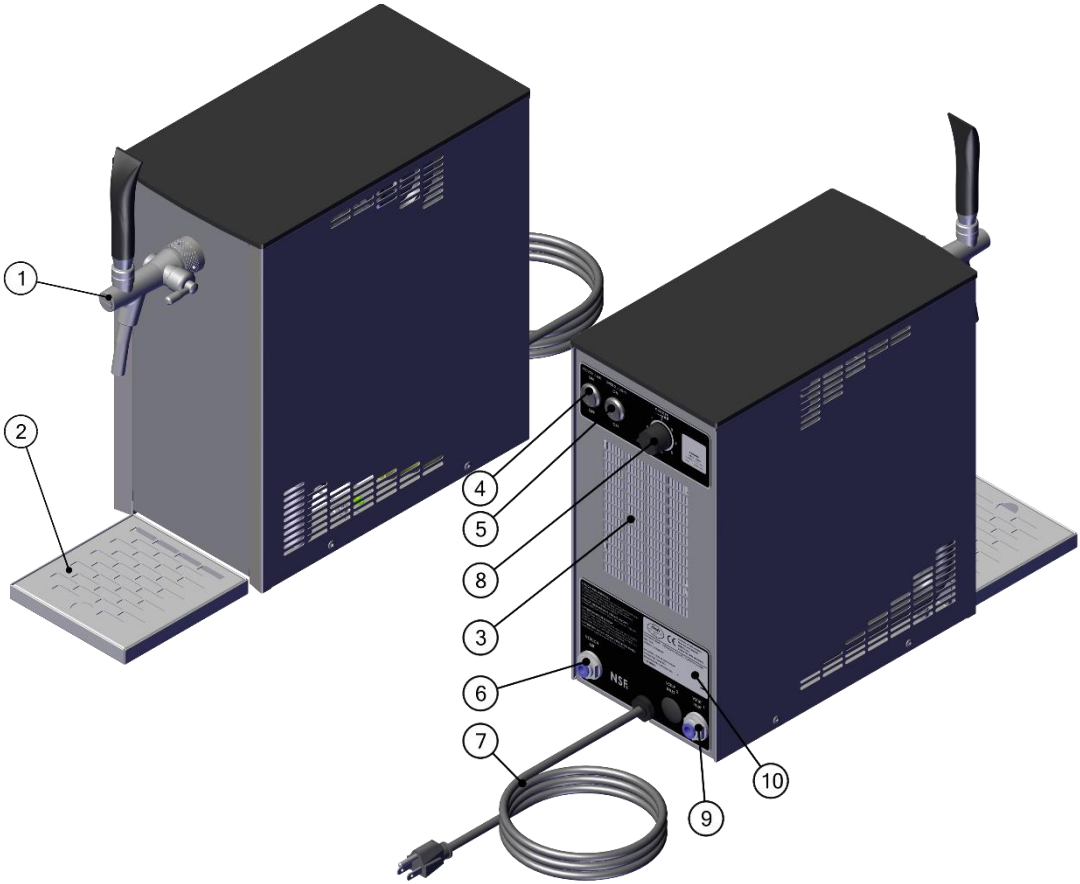

1	Tap	7	Power cable
2	Drip tray	8	Thermostat
3	Condenser vent grid	9	Beverage outlet (3/8" speed fitting)
4	Air compressor switch	10	Product label
5	Lighting switch		
6	Air outlet (5/16" speed fitting)		

Pygmy 25-K-Exclusive US Green Line 2x tap

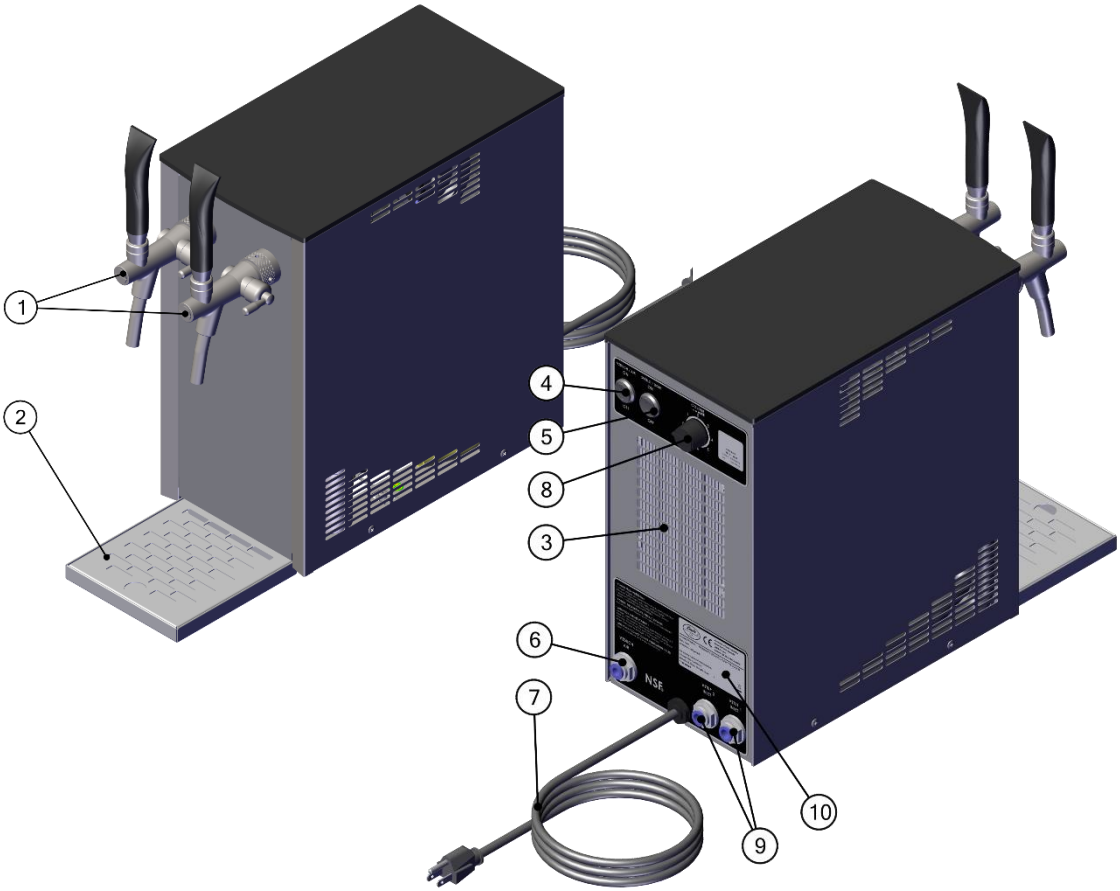

1	Tap	7	Power cable
2	Drip tray	8	Thermostat
3	Condenser vent grid	9	Beverage outlet (3/8" speed fitting)
4	Air compressor switch	10	Product label
5	Lighting switch		
6	Air outlet (5/16" speed fitting)		

10. Package Contents

The package contains:

1. Tap
2. Tap wrench
3. Drip tray and sieve

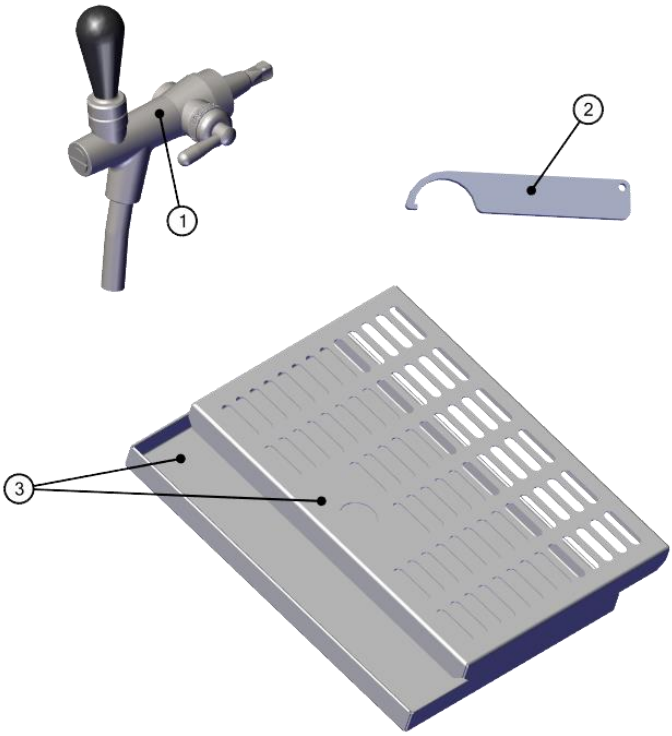

11. Tap Installation

Fit the tap perpendicularly onto the spline coupler.

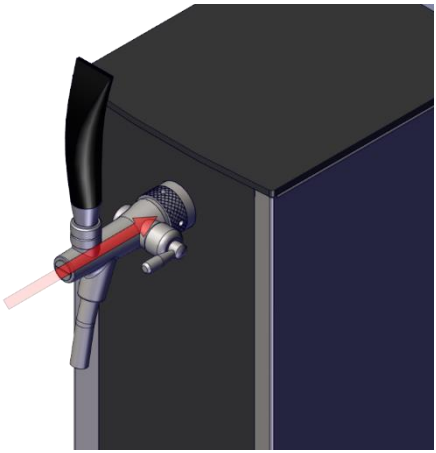

Secure with a flare nut and turn to the left. (loosen to the right).

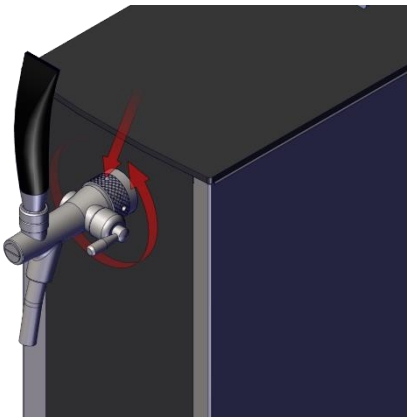

Tighten with the enclosed wrench.

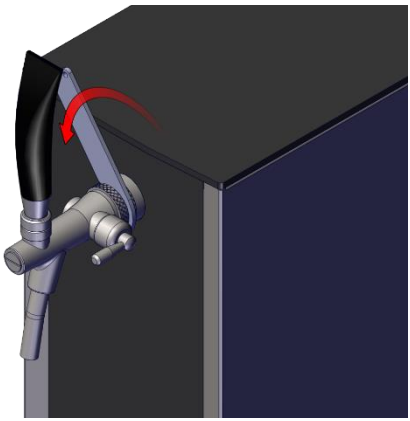

12. Keg Coupler Assembly

12.1 Outlet for keg pressurisation:

Connection variant with bushing: hose is

fitted onto the bushing and affixed with a clip.

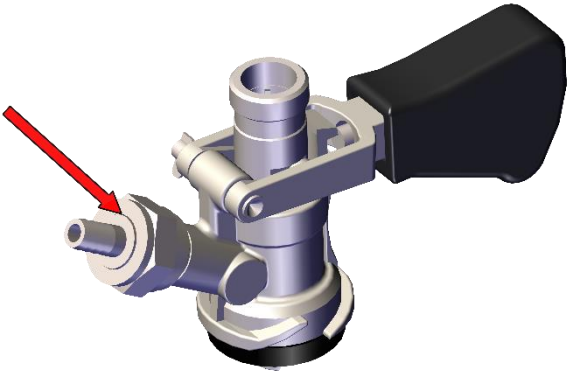

Connection variant with rapid coupling:

Screw an ***F 5/8“ x 5/16“ (8 mm)*** rapid coupling onto the keg coupler

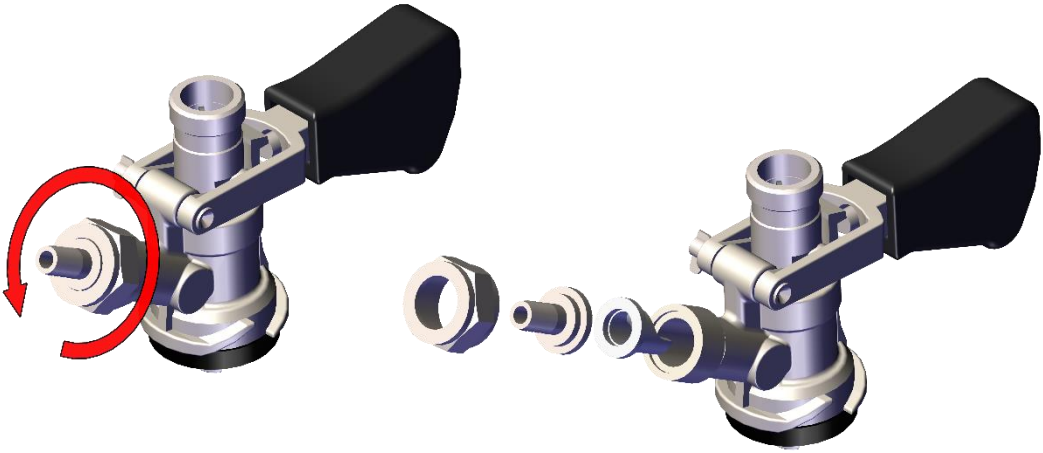

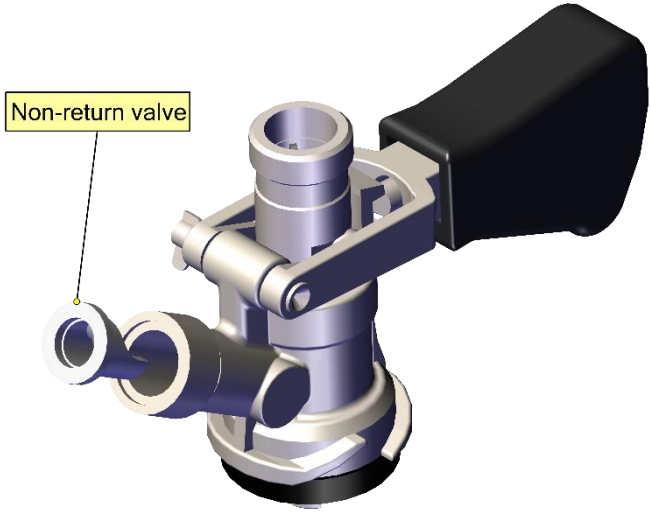

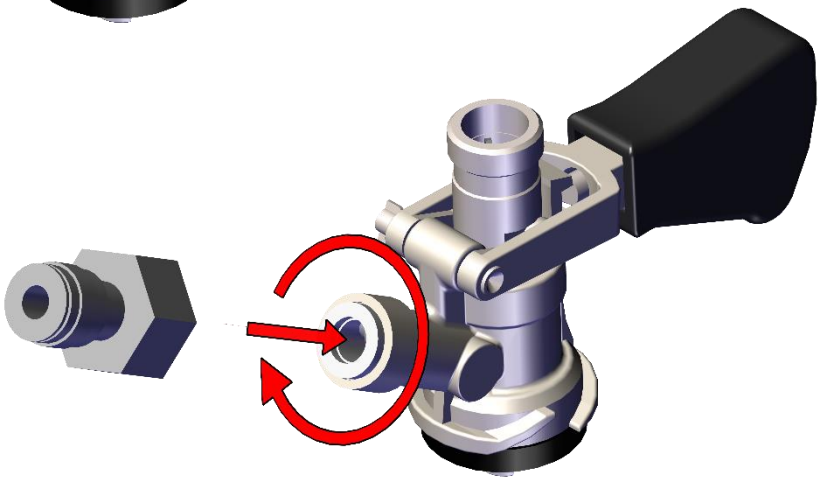

WARNING:

Before you screw the rapid coupling onto the 5/8“ thread, make sure the keg coupler (air inlet for delivery medium) has a non-return valve fitted on it.

12.2 Outlet for beverage:

Screw an ***F 5/8“ x 3/8“ (9.5 mm)*** speed fitting onto the keg coupler

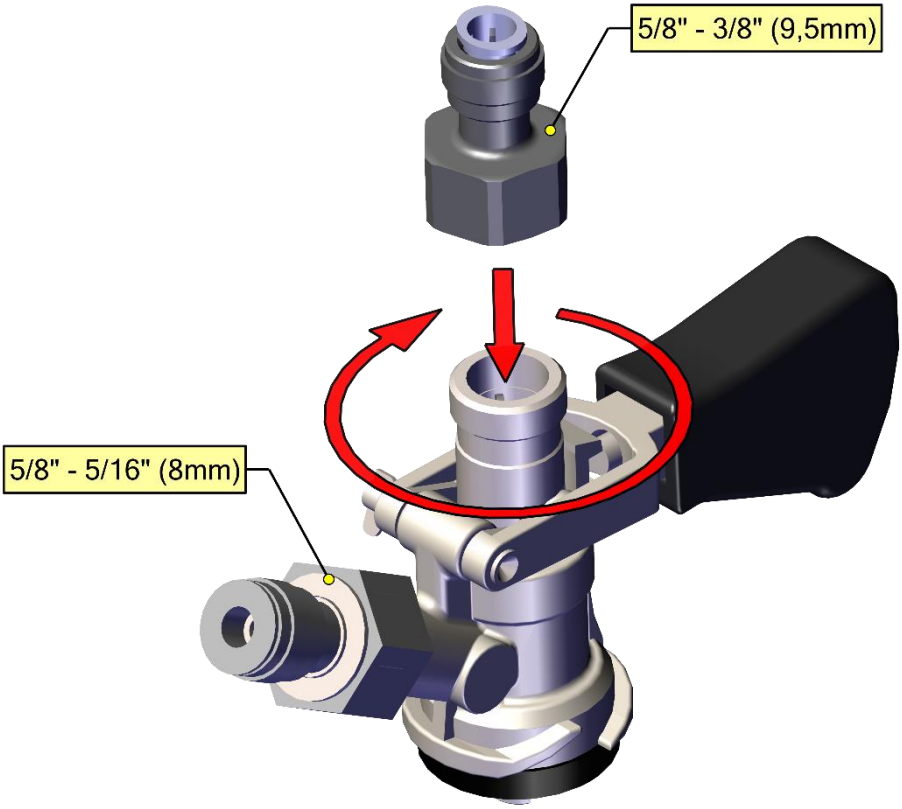

13. Beverage Supply Connection and Pressurisation

Connect the cooling device to the keg coupler by plugging a 3/8“ beverage hose into the speed fitting located on the rear of the cooler marked inlet 1, inlet 2.

Connect the cooling device to the keg coupler by plugging a 5/16“ air hose into the rapid coupling located on the rear of the cooler marked air. To connect two kegs, use a 5/16“ Y speed fitting.

Plug the 3/8“ beverage hose leading from the cooling device into the 5/8“- 3/8“ (9. 5 mm) speed fitting (beverage outlet on the keg coupler).

Plug the 5/16“ air hose leading from the cooling device into the 5/8“ - 5/16“ (8 mm) speed fitting (air inlet on the keg coupler).

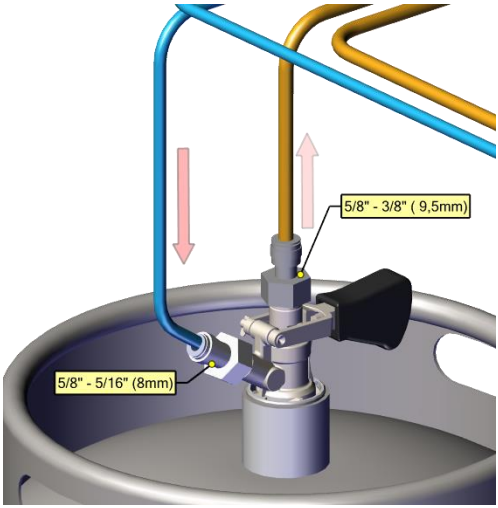

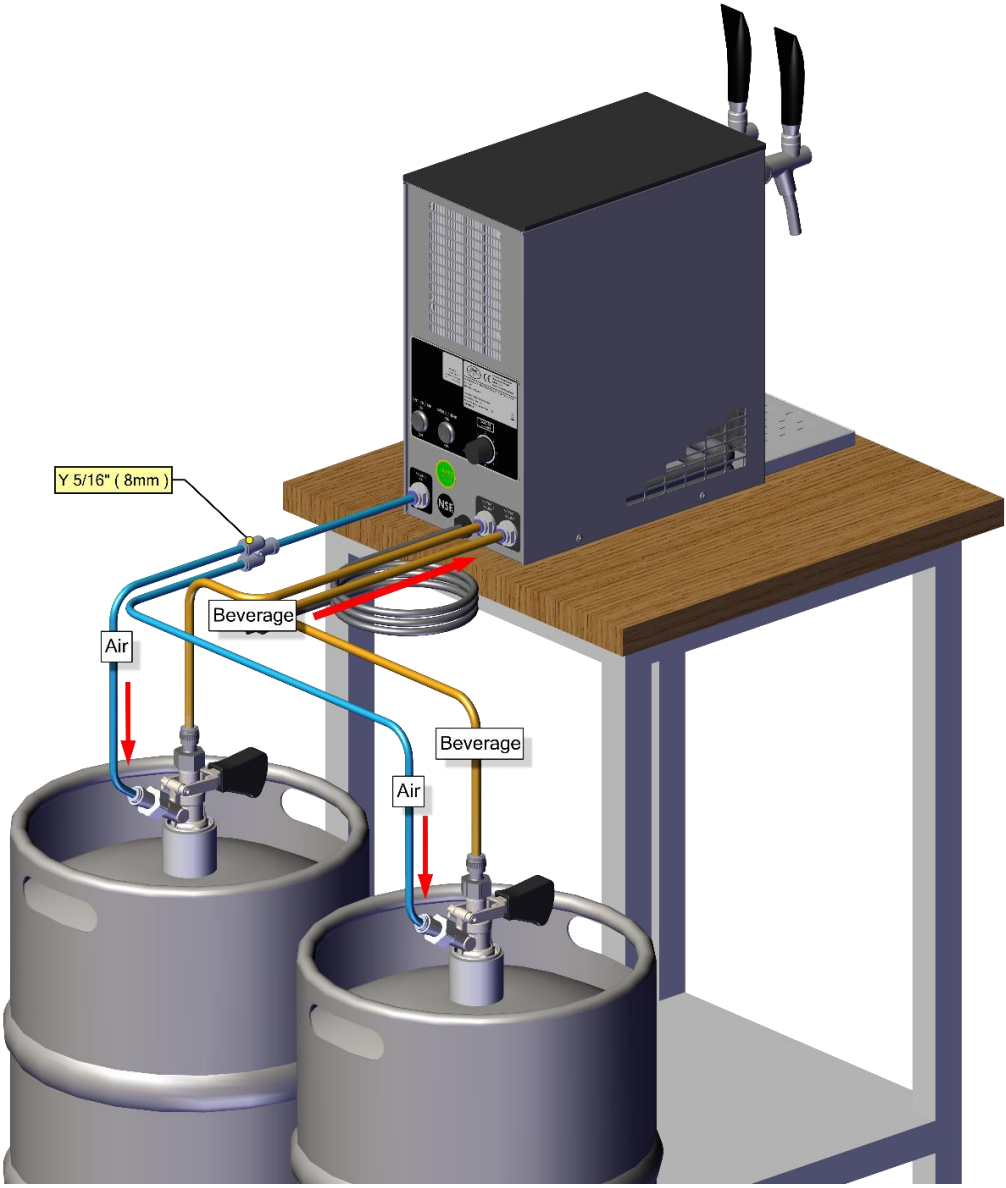
Y 5/16" (8mm)
Beverage
Air
Beverage
Air

14. Inlet and Outlet Marking

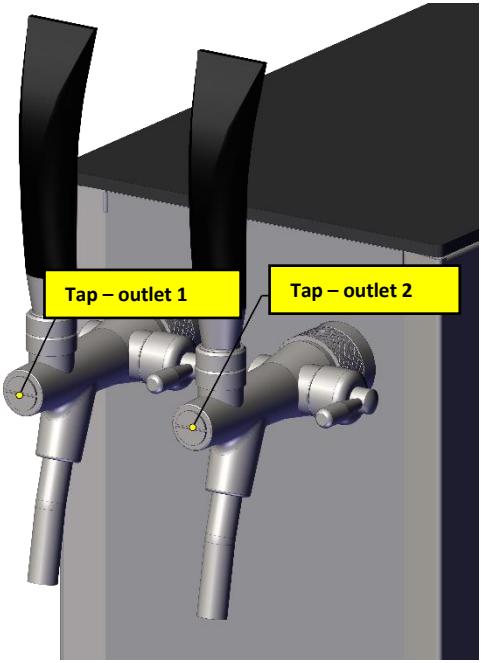

15. Keg Tapping and Untapping

⚠ ***WARNING:***

Make sure the adapter is clean before tapping the keg!

S system keg coupler:

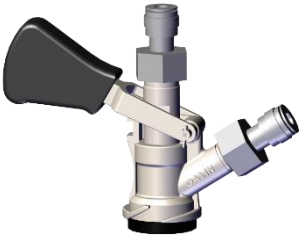

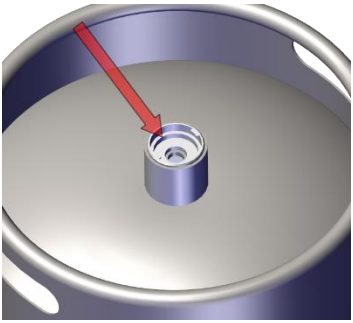

Procedure for tapping and untapping a keg with an S system keg coupler:

1. Keg tapping:

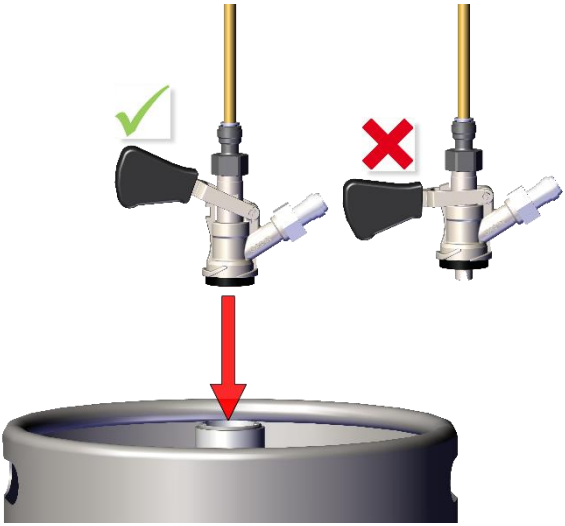

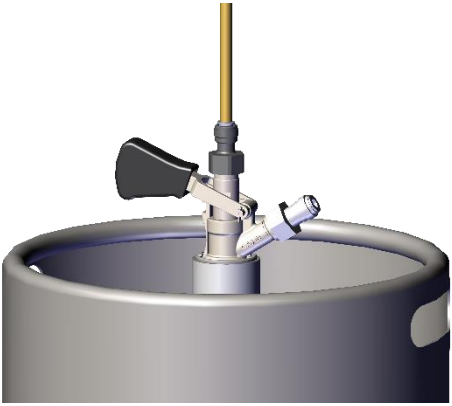

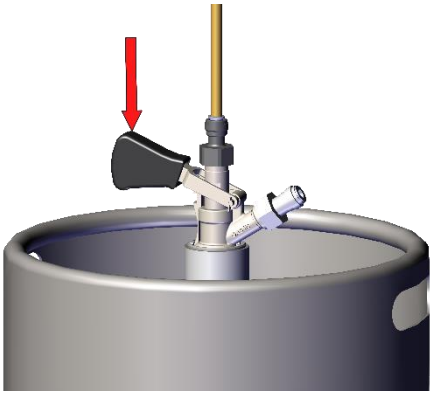

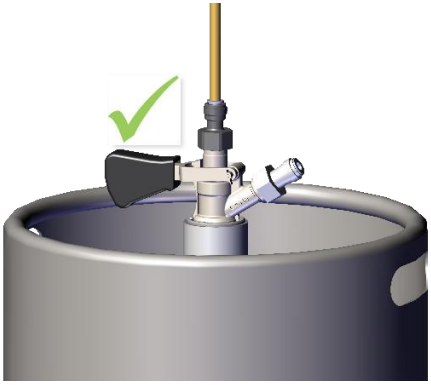

2. Keg untapping:

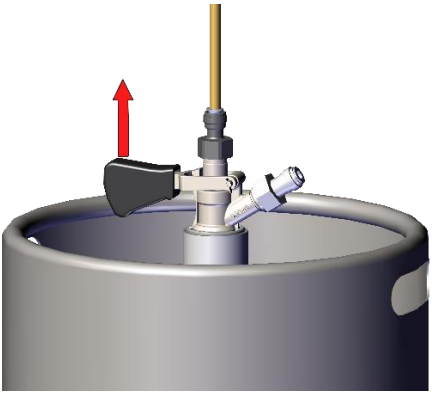

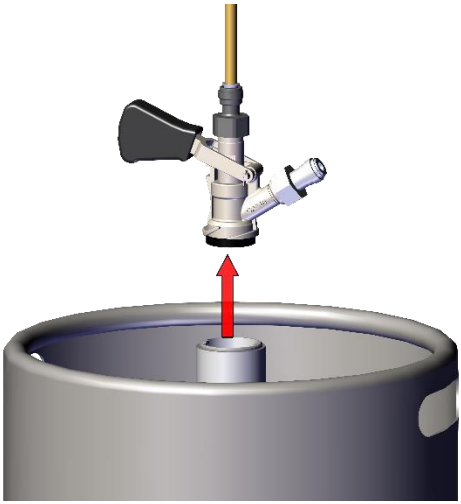

A system keg coupler:

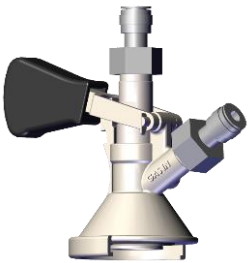

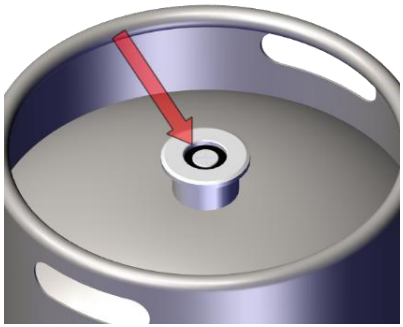

Procedure for tapping and untapping a keg with an A system keg coupler:

1. Keg tapping:

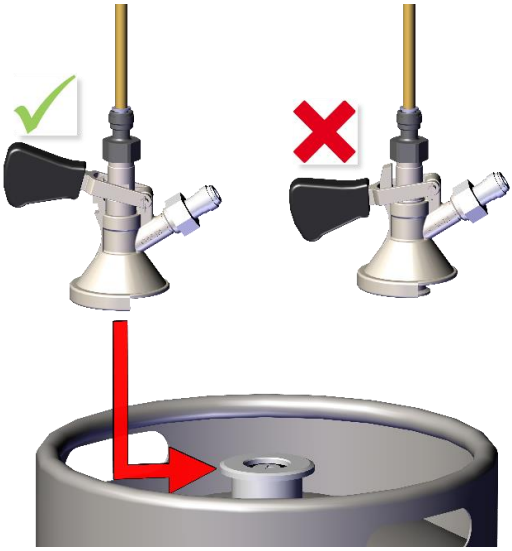

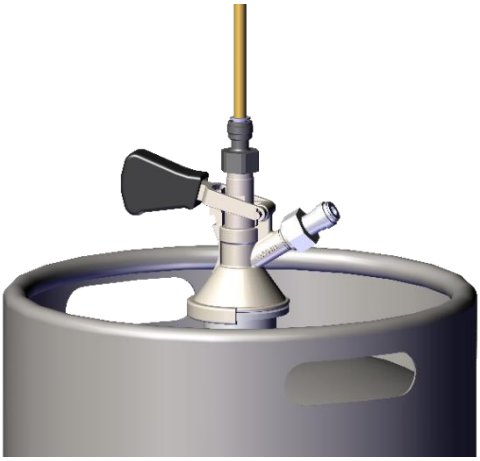

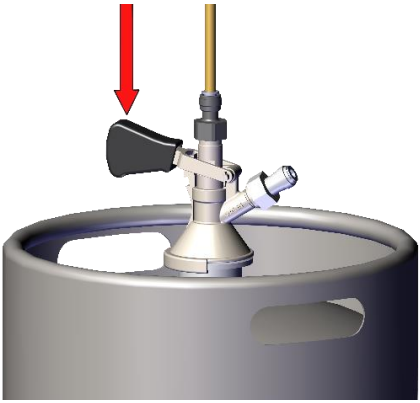

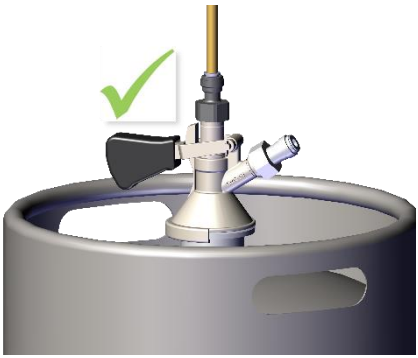

2. Keg untapping:

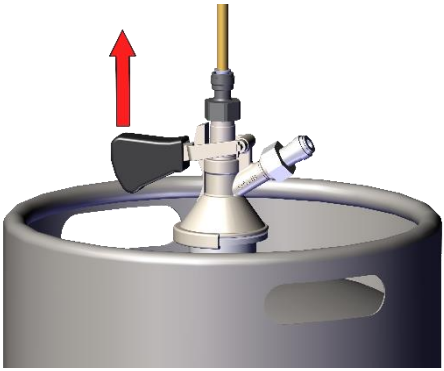

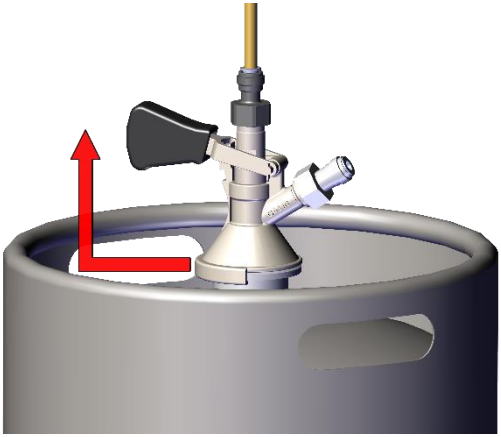

16. Putting into Operation

1. Connect air supply and beverage supply according to point 13.
2. Set the thermostat to 0 position.
3. Connect the cooler to the power mains.
4. Tap the keg in accordance with point 15.
5. Turn the air compressor on using the switch and pressurise it to the required pressure of 1.0-3.4 bar (in models with built-in compressor, pressure is automatically set to 2.8-3.4 bar).
6. Check that all the joints and connections are sufficiently tightened.
   ⚠ ***WARNING:*** If leakage is found, untap the keg according to point 15 and turn off the device. Fix any leaks found on the tubing. If a leak is found inside the device or you are unsure how to proceed, contact a service centre.
7. Use the bar tap to pour out some of the beverage and check that there is no water left in the device.
   ⚠ ***WARNING***: If there is water in the device, do not turn it on. The water might freeze in the beverage tubing and damage the device.
8. Set the desired temperature on the thermostat – see point 18.
9. The beverage is now cooling; once cooled (ca. 5-10 minutes) you can start pouring the first drink.

17. Thermostat Placement

Mechanical thermostat with 1 – 7 numerical scale located on the front of the cooler.

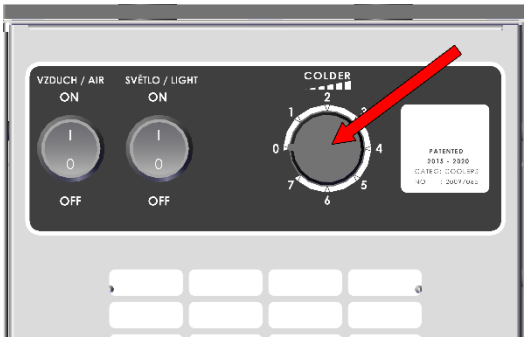

18. Temperature and Adjustment

The temperature of the cooled beverage is controlled by a mechanical thermostat in temperature range of 2 °C to 8 °C. The thermostat has a numerical scale of 1-7.

0 = off

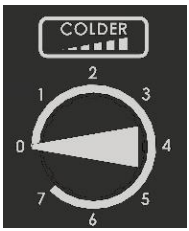

no.1 = max. beverage

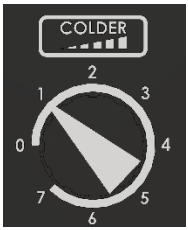

no.7 = min. beverage

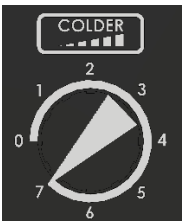

⚠ ***WARNING:*** **If you are using the cooler to cool non-alcoholic beverages, set the thermostat knob to no. 5 at the most, otherwise, there is a risk of the beverage freezing in the cooler's tubing and damaging the device.**

19. Built-in Air Compressor

The air mini-compressor is built into the cooling device itself. The compressor can be turned off separately with a switch. Air pressure is controlled automatically in 2.8 – 3.4 bar range. The air outlet from the cooler terminates in a 5/16“ (8 mm) rapid coupling marked AIR. The air compressor is zero-maintenance, fitted with a molecule filter for the drawn-in air.

20. How to Work with speed fittings.

Speed fiffing Installation

Grasp the rapid coupling and insert the hose all the way inside the rapid coupling body (ca. 20 mm). The end of the hose must be straight, so that it plugs fully into the coupling. If the hose will not go in, moisten the end of the hose.

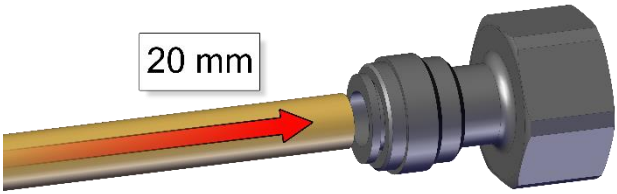

Speed fitting Removal

Hold the grey ring tight against the body of the rapid coupling and pull out the hose.

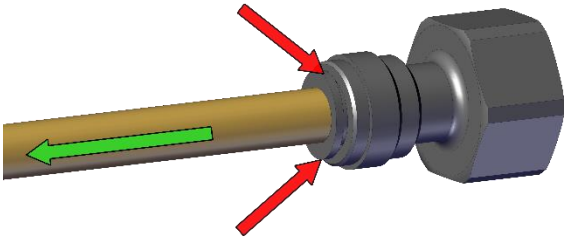

⚠ ***WARNING***: If you do not hold the grey ring but pull at the hose, the rapid coupling will cut even deeper into the hose.

⚠ ***WARNING***: Hoses must not be pressurised during removal.

21. Environmental Protection

Waste Sorting

This product must not be disposed of in communal waste. Electrical waste in the Czech Republic is disposed of within the Rema System (www.remasystem.cz), tel.: +420 225 988 001(002).

In countries other than the Czech Republic, waste sorting is subject to local regulations

Sorted waste enables recycling and reusing used products and packaging materials. Reuse of recycled material helps protect the environment from pollution and reduces resource consumption. Local regulations may regulate the method of disposing household appliances at local collection points or at the point of sale.

22. Maintenance

Flush the beverage tubing of the cooler after each use with pressurised water (see Sanitation by Water). To make flushing easier, use a sanitation adapter according to your type of keg coupler (not included in standard accessories). The cooler must be sanitised once every 14 days by a person with chemical engineering qualifications. The condenser must be checked for cleanliness every month. Any dirt found must be cleaned with compressed air or wiped off. Otherwise, there is a risk of reduced cooling output or damaging of the cooler.

23. Inspection before Every Use

1. Visual check.
2. Lead-in cable check.
3. Condenser cleanliness check (in case of excess pollution of the condenser, clean more frequently than 1x a month).

WARNING: Do not use the device if defects or malfunctions are found.

24. Periodic Checks

- 1x a week: check that the lead-in cable is undamaged and that the plug is firmly in the socket.
- 1x a week: check that the device is not exposed to radiant heat.
- 1x a week: check that air circulation is not obstructed.
- 1x a month: check the cooling unit's condenser and clean it regularly.
- 1x a year: have an engineering inspector check the electrical safety of the device.

25. Condenser Cleaning

The condenser must be cleaned with compressed air 1x a month.

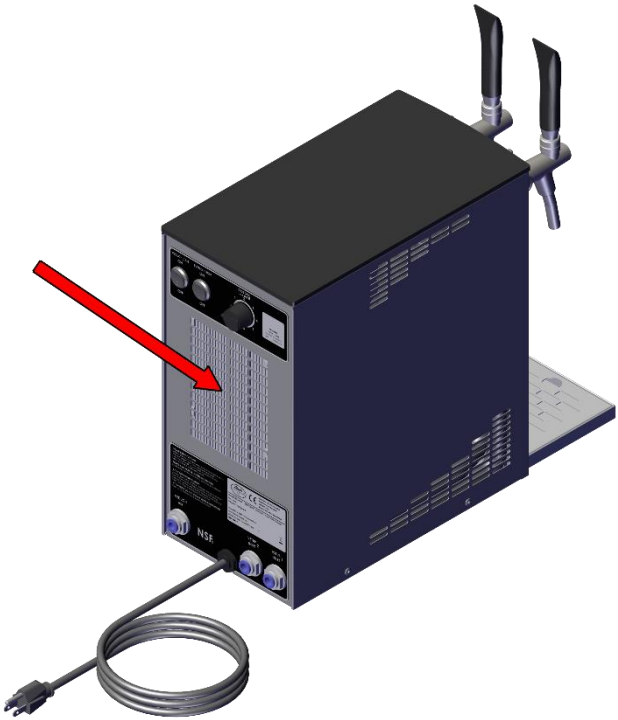

26. Sanitation by Water (Sanitation Adapter)

Connect the sanitation adapter (not included) to water mains using a hose.

WARNING! Maximum water temperature must not exceed 25 °C.

NOTE: Sanitation adapter is not included. Can be purchased as an accessory for the cooler.

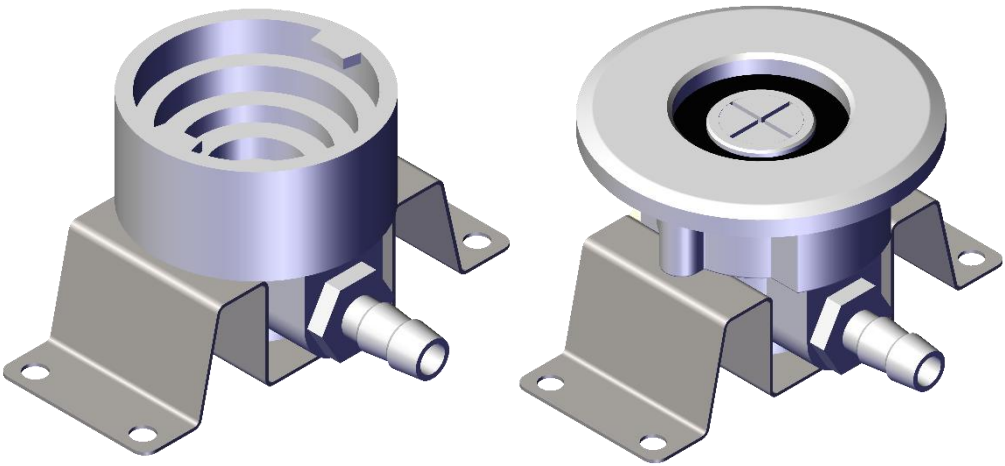

Sanitation procedure:

Once you have finished a keg, connect the keg coupler to the sanitation adapter the same way as if you were tapping a keg. Once connected, turn the bar tap lever to open position and keep it open until clean water flows out of the tap (all beverage residue and partial sediments flush out).

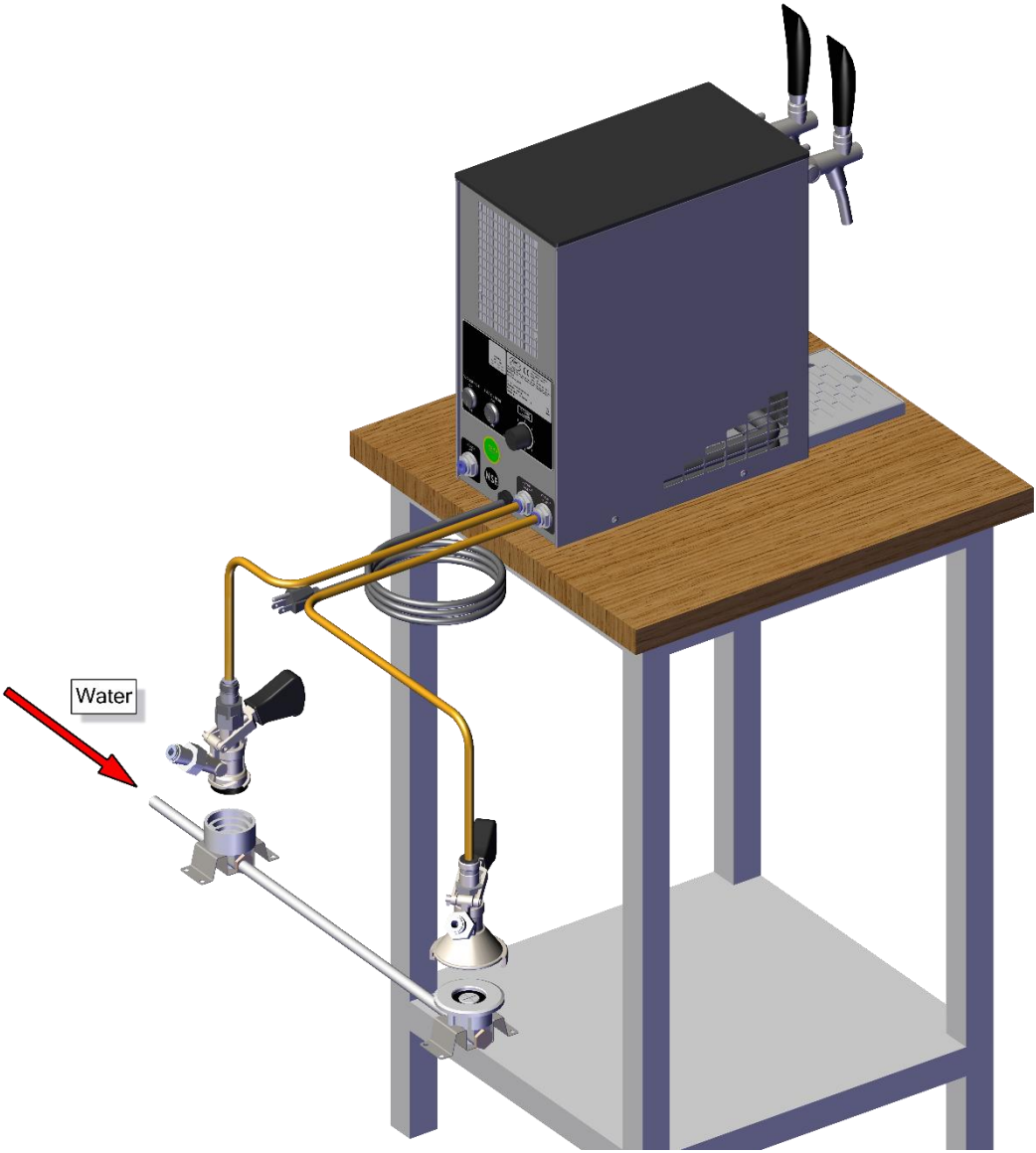
Water

27. Table of Defects

DEFECT	CAUSE	REMOVAL
beverage does not flow	keg tapped incorrectly	check that the keg coupler lever is pushed down
		device with built-in compressor - turn on the switch
	water from sanitation froze	turn off the device; then you have to wait until the beverage starts flowing again (may take a few minutes, or hours!)
	compensator is closed	move the compensator lever
beverage cooled insufficiently	incorrect thermostat setting	turn the thermostat knob to the right towards number 7
	poor air circulation	check the cleanliness of condenser plates
	device overheats	place the device in a colder environment
tap jerks, drink sprays out	pressure too high	reduce delivery medium supply, reduce pressure in the keg
air compressor does not switch on		press the switch on the cooler by the device (K profi), turn the regulator screw to the right
air compressor does not switch off	leakage	pull out and reinsert the air hose, tighten the nuts on the keg coupler
beer foams excessively		reduce beverage temperature - turn the thermostat knob to the right
		regulate flow rate by pushing the compensator lever up
rapid couplings leaking	hose poorly inserted	pull out the hose, check that the end of the hose is flat (not at an angle), level off with a knife if needed
	scratches on the hose	pull out the hose and shorten ca. 2 cm

NOTE: If the defect persists even after the above steps are taken, contact a service centre.

Do not forget to specify the following:

- type of defect
- type of product
- production year
- product's serial number (found on the label)

Ordering components:
ALWAYS USE ORIGINAL COMPONENTS. The manufacturer or supplier bear no responsibility for non-original components or components not recommended by the manufacturer.

28. Spare Parts

When ordering spare parts, always provide the following:

- type of product
- production year
- product's serial number
- full name of the spare part and its number.

29. Technical Data

Card no.	LCH02157	LCH02158
Name	Pygmy 25-K Exclusive 1xkoh	Pygmy 25-K Exclusive 2xkoh
Power (Hp)	1/5	1/5
Power (W)	390	390
Max (l/hour)	30	30
Cont.(l /hour)	25	25
Temp. gradient Δt (C°)	10	10
Coolant type	R290	R290
Voltage	115V 60Hz~1	115V 60Hz~1
Input power (W)	403	403
Current (A)	3,5	3,5
Frame size (WxDxH mm)	185x300x375	185x300x375
Net weight (kg)	19,5	20,5

30. Wiring Diagram

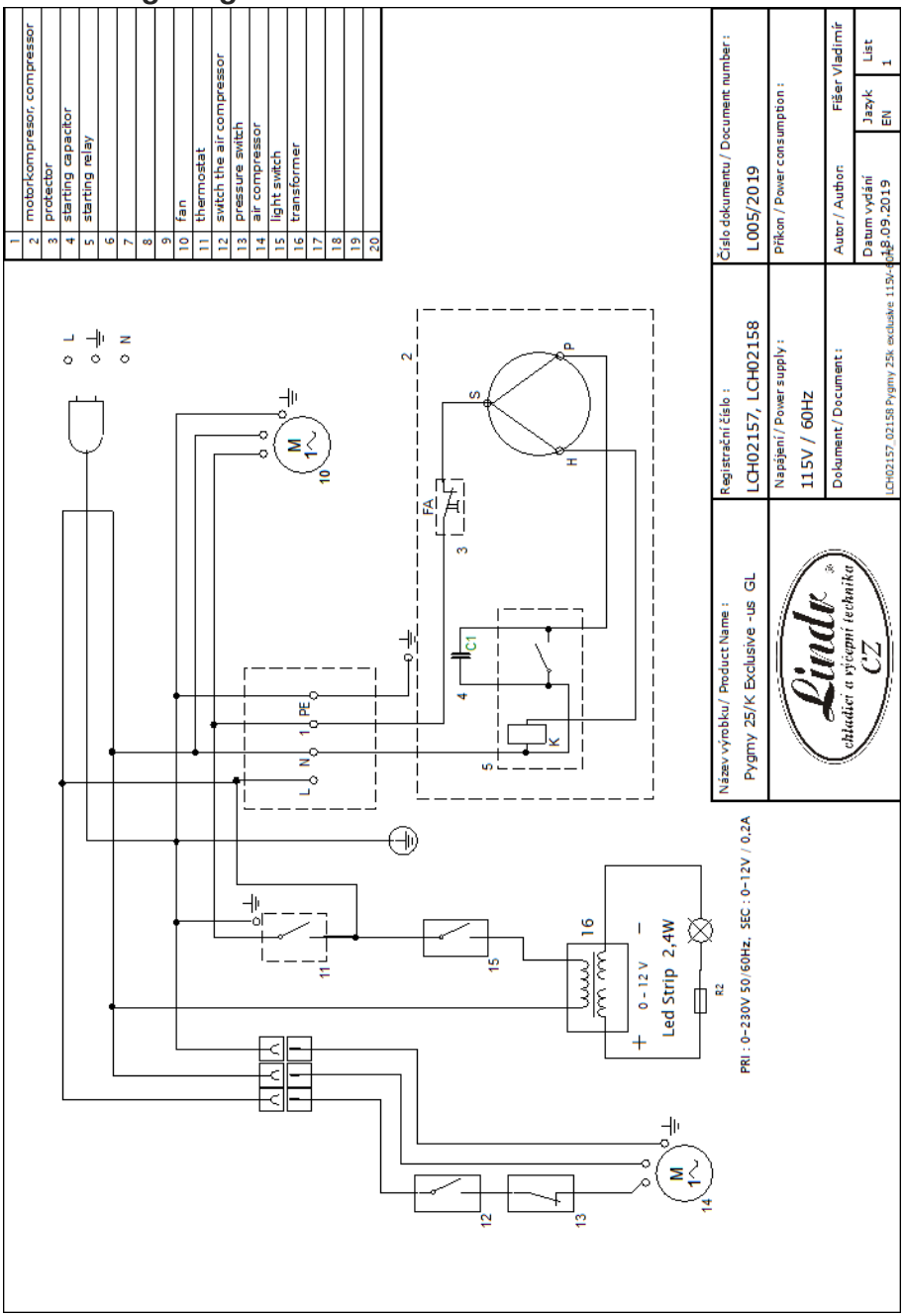
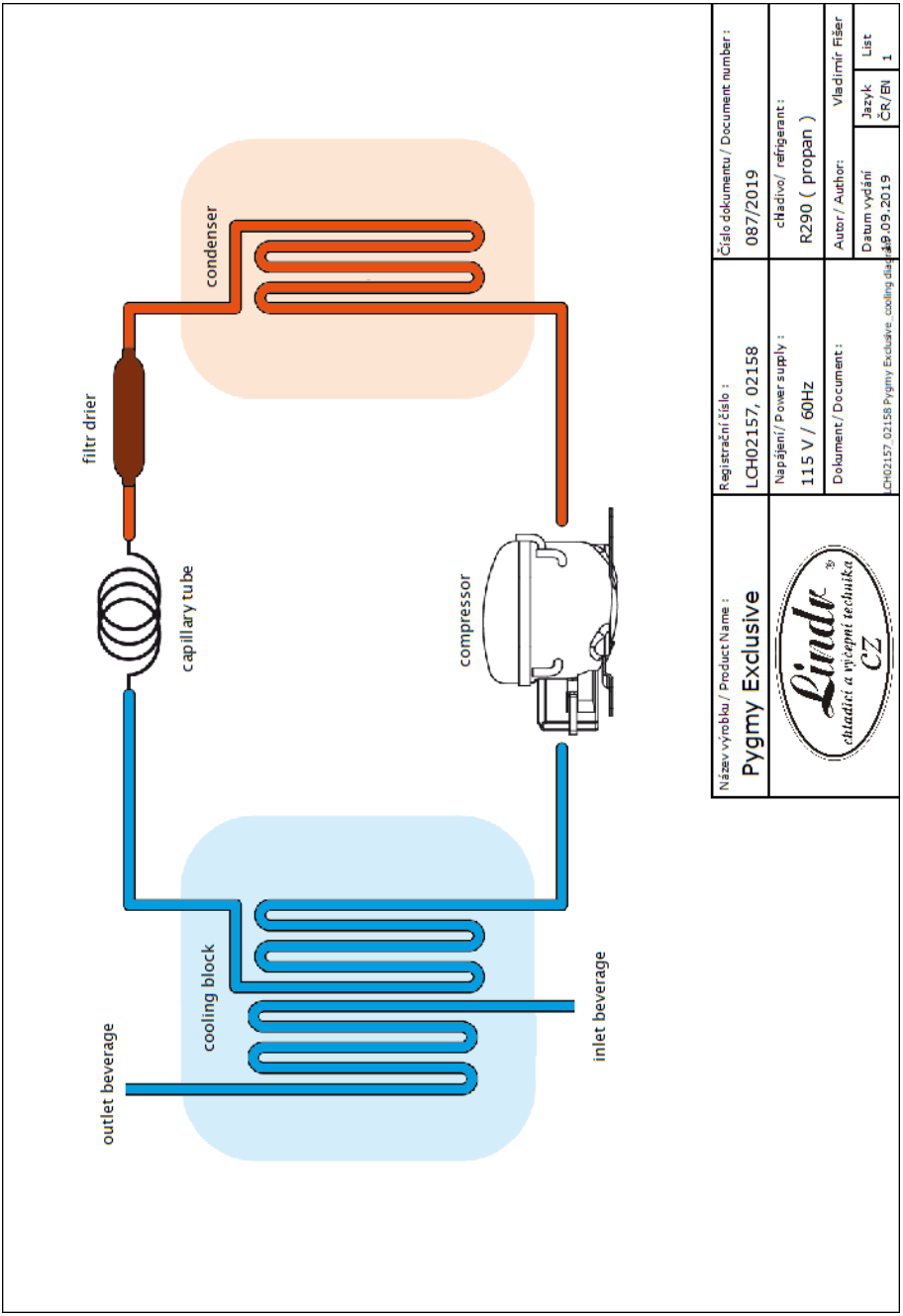
31. Cooling Diagram